DYNAMIC LIGHTING INC.
www.DynamicLighting.com

Please note scale when printing template.
Check Measurement for Accuracy before using.

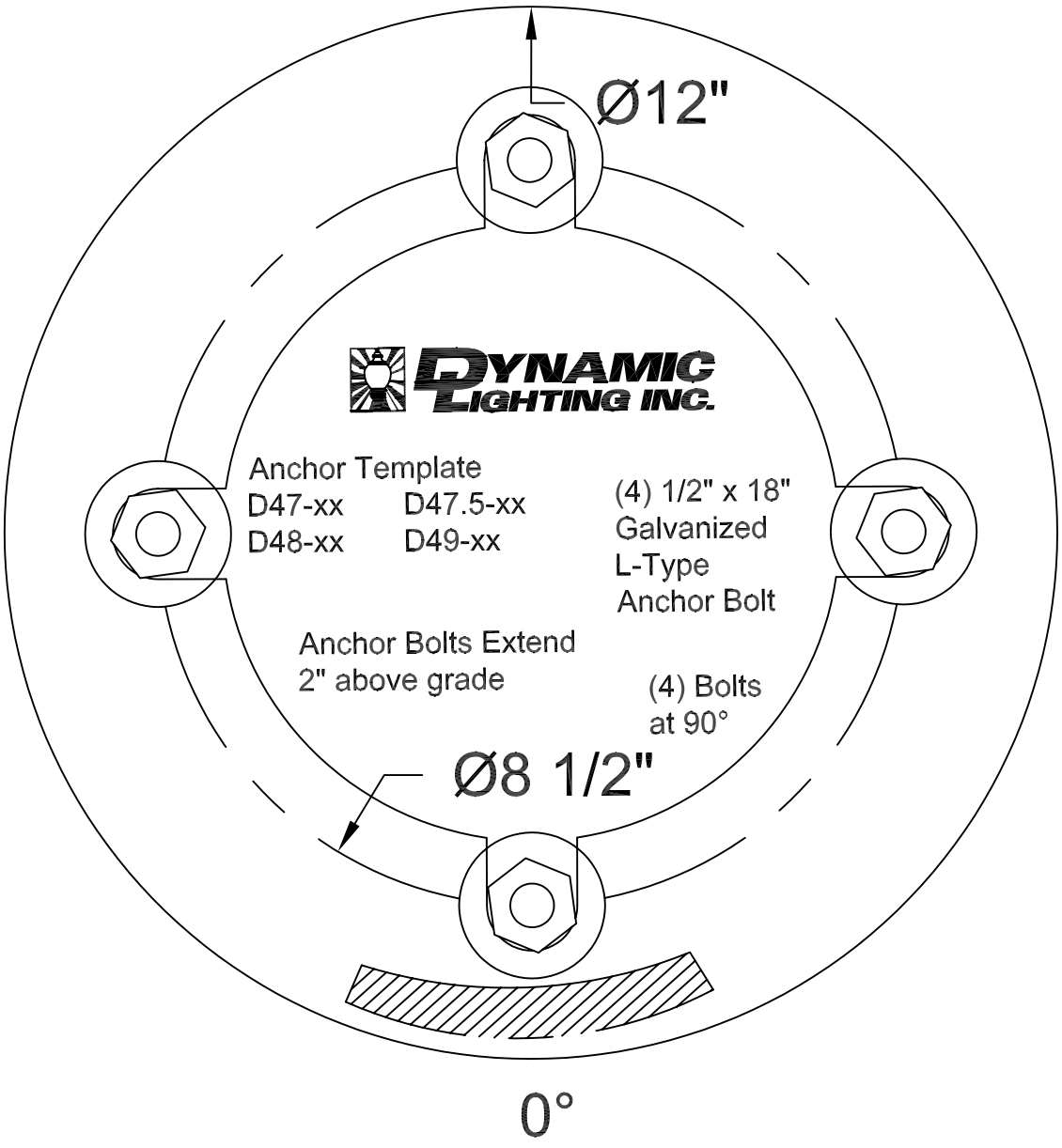

SCALE 1:2

5220 Shank Rd. Pearland, Texas 77581 (800)364-0098 (281)997-5441 Fax